A guide to managing safety

Civil construction

Industry standard

Edition 1
June 2012

Contents

1. Introduction

1.1 Purpose

This industry standard provides practical advice to the civil construction industry on providing and maintaining a safe working environment for workers and the public. The content is based on industry expectations and current practices.

The systems approach outlined here is particularly useful for employers without safety management systems to comply with their occupational health and safety (OHS) duties. It can assist in meeting compliance and documentation requirements of clients or major contractors.

This industry standard covers:

- earthmoving and infrastructure construction, maintenance and refurbishment works
- works at greenfield and short term sites
- supply, acquisition and disposal, inspection, maintenance, registration and safe operation of powered mobile plant and equipment.

1.2 The law

The law requires employers to provide and maintain a working environment that is safe and without risks to the health of workers and the public, so far as is reasonably practicable. It also sets out duties that employers must comply with as part of their general duty. These include:

- providing or maintaining plant or systems of work that are safe and without risks to health
- making arrangements for the safe use, handling and storage or transport of plant or substances
- maintaining the workplace under their management and control in a condition that is safe and without risks to health
- providing adequate facilities for the welfare of workers at the workplace under their management and control
- providing workers with information, instruction, training or supervision that is necessary for them to work safely and without risks to their health
- monitoring the conditions at workplaces under their management and control.

Employers must also, so far as is reasonably practicable, consult with their workers who are directly affected by certain health and safety matters.

An employer's legal duties cannot be removed or limited through contractual arrangements with other employers, workers or contractors. These duties remain even when they overlap with those of other employers. For example, if a principal contractor (PC) has a supervisor on-site other employers (contractors) must still supervise their workers to ensure their work is being done safely.

1.3 Status of this industry standard

The industry standard provides information to assist duty holders in the civil construction industry with providing and maintaining a safe workplace, and achieving a minimum level of health and safety compliance. Alternative methods may be followed if they achieve an equivalent or higher level of OHS.

Where 'must' is used, this guidance must be followed, so far as reasonably practicable.

2. Planning for safety

2.1 General

Site safety planning should be managed and coordinated by the PC and should involve all employers. Each employer should plan how to safely do the works over which they have control.

Safety plans should be regularly monitored and modified as necessary.

On larger projects, safety planning may be jointly delivered by several on-site employers. The PC may be engaged as the overall project manager for the project and other employers (major contractors) may be engaged to manage separate sites within the project (eg major freeway construction).

2.2 Site management

Appropriate policies and procedures should be in place for managing site safety. These can be part of an overall management system, provided the system effectively manages and controls the risks from the work being done.

A safety system should include process' for:

- identifying persons with OHS responsibilities
- managing the health and safety of contractors and sub-contractors
- developing and manage consultation procedures for health and safety matters
- identifying hazards and control risks
- establishing the location of underground services
- developing site safety rules
- monitoring site activities and enforcement of safety rules
- establishing site amenities and implement ongoing maintenance
- developing site specific induction for workers and others (eg delivery drivers and visitors)
- ensuring only trained and competent workers are allowed to work on-site
- ensuring all plant (machinery and equipment) is safe and without risks to health before use
- identifying requirements for a mobile plant compound and vehicle parking
- developing traffic management plans
- identifying and control risks to the public
- developing emergency response plans for reasonably foreseeable emergency situations.

2.3 Other employers on-site

Each employer on-site needs to effectively manage the safety of their workers, mobile plant and equipment. Processes or procedures should be in place, including those to ensure:

- safe work method statements (SWMS) are developed for all high risk construction work
- safe work procedures are developed for other tasks where there is risk to workers or the public
- workers are competent or are directly supervised by competent workers
- the health and conditions of workers are monitored.

If using powered plant, ensure it is mechanically sound, safe for use and has the required safety documentation.

2.4 Work supervision

Employers must supervise their workers and the work over which they have control. This includes directing and monitoring the work to ensure it is done safely.

To effectively supervise safety, it is important supervisors have:

- an appropriate level of OHS knowledge
- knowledge of and experience in the work being done
- an understanding of their role and expectations of them
- an appropriate level of management and supervisor skills
- an understanding of safety procedures, acceptable industry practices and this industry standard
- for excavation work, experience in the type of excavation and the ability to identify factors that could affect the safety of an excavation
- for trenching (1.5 metres or deeper), successfully completed install primary ground support or trench shoring and safety training or hold a mine manager's (trenches) permit.

2.5 Labour hire providers

Labour hire providers must have systems in place that manage the health and safety of their workers, including while with the host employer.

Prior to hiring out workers to civil construction sites, a provider of labour should ensure its workers:

- have completed mandatory construction industry induction training (CI card)
- have completed the provider's own safety induction
- are qualified to undertake the tasks required
- are physically able to undertake the required tasks.

While with the host employer, the provider of labour should ensure its workers:

- have access to suitable amenities
- are inducted into the host employer's safety procedures
- only do specified tasks (including operating plant) for which they are competent to do
- have the necessary personal protective equipment (PPE) and protective clothing for the tasks to be done
- are adequately supervised by the host employer.

2.6 Controlling the risks from hazards

Hazards may include:

- moving materials and equipment, or manual tasks
- rough ground
- falls (including climbing in and out of mobile plant and excavations)
- close proximity of mobile plant and other vehicles (including on-site and road)
- excessive noise or dust
- utility services (eg powerlines and gas pipes)
- contaminated soil
- weather conditions and UV radiation.

Where there is a risk to health and safety, employers should eliminate the risk so far as is reasonably practicable (eg de-energise powerlines). If the risk cannot be eliminated, the risk must be reduced so far as is reasonably practicable by for example:

- implementing any mandated controls specified by law
- substituting a new activity, procedure, plant, process or substance (eg use a skid-steer loader that cannot reach powerlines, not a backhoe)
- using engineering controls (eg fit a height limiter to the backhoe hydraulics)
- a combination of the above.

Control any remaining risk by using:

- administration controls (eg provide specific safety training, work instructions, post warning signs)
- PPE such as hearing protection, high visibility clothing
- a combination of the above.

2.7 Preventing common injuries

Plan how to manage the cause of common injuries, such as manual handling of materials or equipment, using high force, slips and trips, and falling into excavations, off ladders or from mobile plant.

Factors that can increase the risk of injury when handling large, bulky or heavy items (eg generator sets, vibrating plates, pipes and hoses) are:

- poor planning
- poor storage or location of equipment
- moving over rough, boggy or loose surfaces and terrain
- poor access to the work or storage areas
- poor layout of storage areas
- excessive distance items need to be moved
- obstacles that have to be negotiated
- location or design of storage on vehicles
- using high force or sustaining awkward postures or movements.

Factors that can increase the risk of slips, trip and falls are:

- poor site housekeeping
- climbing onto and getting down from mobile plant
- inadequate and poorly maintained access areas
- mud on the floors of facilities and on the steps of mobile plant
- climbing in and out of excavations or crossing rough terrain
- excavations that are not adequately barricaded
- worn or inappropriate footwear.

2.8 Consulting workers

Workers must be consulted on OHS matters that directly affect them. This includes identifying hazards and risks, and determining risk controls. If workers are represented by a health and safety representative (HSR), the consultation must involve the HSR.

2.9 Health and safety coordination plan

The PC must develop and maintain a health and safety coordination plan. This plan is not a safety management system but a document that outlines key site safety arrangements. It must be available on-site for inspection so all workers have ready access to information. The plan must include:

- names, positions and responsibilities of all people with specific health and safety responsibilities
- how the health and safety of workers is arranged and coordinated
- arrangements for managing OHS incidents
- site-safety rules and arrangements for ensuring workers are informed of the rules.

The PC must regularly review the plan to ensure it is updated as site conditions change.

2.10 Developing safe work procedures

Safe work procedures are essential to control the risks. Before doing high risk construction work an SWMS must be developed for each high risk task and then followed. The SWMS must be reviewed if site conditions change and modified as required. It describes how the task is to be performed and must:

- identify the task
- identify the health and safety hazards and risks arising from that task
- describe how the risks will be controlled
- describe how the risk control measures will be implemented.

An SWMS can also be used to document other safe work procedures.

When developing an SWMS, ignore any existing risk controls when identifying hazards and risks (eg scaffold or traffic barriers). These controls can be included in the measures to control the risk (eg risk - falls from heights and risk control - scaffold).

If a generic SWMS is used, it must be reviewed and modified as necessary before the task starts to reflect the site conditions. It should also record where the task is being performed and the date of review.

High risk construction work includes any construction work:

- where there is a risk of a person falling more than two metres (including from mobile plant or into excavations)
- on telecommunications towers
- involving demolition, the removal or likely disturbance of asbestos, structural alterations that require temporary support to prevent collapse, a confined space, a trench or shaft deeper than 1.5 metres, a tunnel, explosives or diving
- on or near pressurised gas distribution mains or piping, chemical fuel or refrigerant lines or energised electrical installations or services
- in an area that may have a contaminated or flammable atmosphere, or where there are artificial extremes of temperature (eg inside a roof space or operating mobile plant in excessive heat when the cabin is not air conditioned)
- on or adjacent to roadways or railways used by road or rail traffic
- where there is movement of powered mobile plant (including delivery and pick-up of powered mobile plant)
- in, over or adjacent to water or other liquids, if there is a risk of drowning.

2.11 Training and competencies

Employers must ensure workers are provided with information, instruction and training that is necessary to enable them to work safely, including a CI card and instruction or training on the employer's safety procedures.

Verify workers also have:

- a current WorkSafe high risk work licence if doing high risk work (eg rigging) or operating high risk plant (eg mobile cranes)
- other required licences or worker registrations (eg VicRoads, plumbing, electrical licences)
- if operating plant, competencies for the plant being used and any specialised attachments (eg excavator and hydraulic hammer)
- the necessary training to undertake the task safely.

Skills and competencies should be verified before the workers arrive at site or before the work begins.

2.12 Personal protective equipment

Employers must ensure workers are supplied with appropriate PPE, including:

- hearing and eye protection (eg safety sun glasses, ear plugs)
- work gloves
- protective head and footwear (eg helmets, safety boots)
- high visibility clothing (reflective types for low light situations)

- clothing for the weather and work environment
- protection against UV exposure (eg wide brimmed hats and sunscreen)
- any other required work clothes.

Workers should also be instructed in the selection, safe use, maintenance and storage of any PPE provided.

2.13 Powered construction equipment

Powered equipment (mobile plant and non-handheld powered equipment) must be mechanically sound and in a safe condition. Ensure:

- maintenance records are up to date and available
- operator instructions and a summary of the maintenance records (eg manual, service book or decals on smaller plant) are with the equipment
- functional controls are permanent and legibly marked (unless function is obvious)
- legible warning and safety signs/stickers are correctly positioned
- all necessary guards are in place
- protective devices are fitted (eg seat belts, rollover protection, handrails)
- all required safety equipment is provided (eg first aid kit, traffic cones)
- risk controls in place, including manual tasks related to the plant
- risk assessments for the equipment are current
- if required, road registration and any road authority transport permits have been granted.

Ensure high risk plant that requires WorkSafe registration (or interstate equivalent) is not used until registered. High risk plant includes:

- mobile cranes with a safe working limit (SWL) of more than 10 tonne
- truck-mounted concrete placing booms
- most industrial pressure vessels.

2.14 Construction equipment providers

If hiring out construction equipment, including powered mobile plant, the equipment should comply with the requirements above.

If acting as a booking agent, verify the equipment owner is complying with the equipment requirements and ensure the operator has:

- completed CI card
- competency to operate or drive the plant
- PPE.

You should verify the owner/operator has the required insurances to get onto the site (eg public liability, insurance for road vehicles and personal injury or disability).

2.15 First aid and site facilities

Employers should ensure their workers have access to appropriate first aid and site facilities.

First aid

This includes having trained first aiders and sufficient first aid kits available. First aid equipment should be regularly inspected, maintained and stored hygienically.

Contact numbers, locations of emergency services and the nearest medical facility should be recorded and displayed where workers can see them.

Site facilities

Employers must provide adequate facilities for the welfare of workers at workplaces under their management or control (eg washrooms, lockers and dining areas). The minimum level of amenities depends on the number of workers on-site, site location, the type of work being undertaken and duration of work.

Employers must consult with workers when making decisions about the adequacy of facilities. If the PC is providing facilities for all workers on the site, each employer should confirm they are suitable.

Basic requirements for short term and mobile sites

On short term or mobile worksites, workers should have access to the following basic facilities:

- fresh drinking water (eg bottled water or labelled water container)
- handwashing facilities (eg waterless hand wash and paper towels)
- stocked first aid kit
- food storage container (eg insulated cooler) and sealable rubbish container
- if no shelter on-site, access to work vehicles for shelter.

Workers should also be consulted on access to toilets.

For planned or scheduled works, involving **no more than six workers,** the following arrangements can be used.

If works are **between one and two days** and there is no on-site toilet, arrange for an accessible off-site toilet for workers to use (eg a clean, well maintained public or other toilet) if it is within 500m of the worksite. If there is no toilet within 500m, the following applies to an off-site toilet:

- it is in an urban area within 15 minutes road travel, or a non-urban area within 30 minutes road travel
- a work vehicle is available for workers to drive to the toilet at any time
- the public must not be at risk from the arrangement (eg leaving the site unsecured)
- avoid creating a slip hazard in the toilet by tracking in mud.

If intending to rely on another employer's facilities for workers to use, permission should be obtained.

If works are expected to **exceed two days,** an on-site toilet should be provided from the start of the works.

If works are expected to take **more than five days**, additional on-site facilities should also be provided from the start of the works.

Where it is not reasonably practicable to provide amenities for short term or mobile worksites, according to the above requirements, use a risk assessment, which takes into account the following factors, to determine appropriate alternative arrangements:

- scope, type and duration of works
- number of workers on-site
- difficulties in getting amenities to the site (eg access is via 4x4 tracks)
- proximity to existing amenities (eg permanent amenities are close to site)
- government or land owner restrictions
- location is within environmentally sensitive area
- location (eg amenities will be a safety risk for road traffic or the public)
- no suitable safe location at site.

When considering alternatives, workers should be consulted and the process documented. Written details of the agreed arrangements should be on-site.

2.16 Reporting incidents to WorkSafe

An employer or self-employed person must immediately notify WorkSafe after becoming aware of an incident at a workplace under their management and control that resulted in:

- a workplace fatality
- an injury requiring immediate medical treatment
- treatment by a medical practitioner within 48 hours of exposure to a substance
- other incidents (see *Guide to incident notification*) where a person was exposed to an immediate risk.

The employer or self-employed person must ensure the site is not disturbed until a WorkSafe inspector permits it, except for:

- protecting the health and safety of a person
- aiding the injured person
- taking essential action to make the site safe
- preventing further occurrence of the incident.

The employer or self-employed person must also give WorkSafe a written record of the incident within 48 hours of becoming aware of such an incident. The incident form can be completed online at **worksafe.vic.gov.au.**

3. Site set-up and operation

3.1 Safety management

Ensure a suitable person is available to manage day-to-day site OHS. If this person is away from the site, the role should be delegated to another suitable person.

During site set-up and operation:

- develop, regularly review and modify, as necessary, the:
  - site health and safety coordination plan (must be available on-site)
  - emergency response plan
  - traffic management plan
  - public protection arrangements (see 4.8)
- verify PC signage and required information is displayed
- display relevant warning signs
- develop and document site-safety rules and how they will be enforced
- establish and maintain:
  - site amenities
  - first aid arrangements
  - pedestrian access to the site
  - vehicle and plant access to the site
  - vehicle parking, mobile plant compound and service areas
  - traffic management controls
  - site security
  - hazardous substances register and safe storage requirements
- conduct and record site inductions
- identify hazards and control measures, identify underground or overhead utilities services, and any works permits and other authorisations required
- ensure SWMS are developed for all high risk construction work, including sub-contractors' SWMS

Before allowing workers or powered plant on-site for the first time, ensure:

- SWMS are provided by sub-contractors
- site induction is delivered to each worker
- each employer's supervision arrangements are identified
- if high risk work licences or other competencies are required, they are verified
- powered plant is checked for safety.

3.2 Supervision

Before letting new workers start at the site, supervisors should ensure they complete a site induction and receive instructions on how the work is to be done (eg SWMS and other work procedures).

Supervisors should monitor and manage the work to ensure:

- site rules are being followed
- workers have sufficient experience and/or training
- mobile plant is operated by competent persons
- SWMS are appropriate to the task being undertaken
- SWMS and other work procedures are being followed
- PPE and safety equipment is being used, maintained and stored correctly.

If trainees or inexperienced workers are on-site, ensure they are under the direct supervision of experienced workers who:

- understand what is required to supervise a trainee
- are competent in doing the work or operating the plant
- can take immediate action to rectify a dangerous situation.

Training requirements may involve maintaining a logbook for a registered training organisation as part of a trainee's assessment.

3.3 Layout of facilities and storage sheds

Facilities and sheds should be located on level and firm ground and clear of obstructions. Workers should be able to access facilities and sheds without risk of slips, trips and falls, and be separated from site traffic. Access to storage sheds should allow for portable equipment to be handled safely.

When selecting the location, consider:

- a buffer zone from nearby houses and other public areas, if needed
- access to electricity and other services (see 3.4)
- 'no go zone' restrictions, if near overhead powerlines
- proximity of storm water drains and other water courses.

Once in place, facilities must be maintained in good condition. For example:

- toilets regularly cleaned and serviced
- other facilities and sheds regularly cleaned, including floors
- waste, off-cuts and other rubbish is regularly removed
- storing material and equipment away from access areas.

Facilities must not be used to store tools, equipment or hazardous substances and dangerous goods.

3.4 Electrical power

Electricity safety laws mandate that electrical installations on construction sites must comply with both AS/NZS 3000: *Wiring rules* and AS/NZS 3012: *Electrical installations – Construction and demolition sites*. Guidance on providing and managing temporary electrical power is provided in the Industry standard, *Electrical installations on construction sites.*

Site electrical power, where applicable, should be connected to the electricity distribution system (mains supply).

Employers should consider the risks from using alternative sources of power against the one-off cost of connecting to mains supply. The risks from alternative power sources include:

- storage and transport of fuel containers for generators
- refuelling generators
- manual handling of generators and fuel
- battery storage and explosion protection.

If new, private powerlines are required for a site in a hazardous bushfire risk area, they must be placed underground, including those within the site. A hazardous bushfire risk area is an area a fire control authority, such as the CFA, has assigned a high fire hazard rating and is not in an urban area.

3.5 Site security

Employers must ensure the public is not at risk from exposure to site risks. A risk assessment should be used to determine the level of site security required, including considering the following key risk factors:

- site location (eg near houses, shops, playgrounds or schools)
- paths or other public access routes passing the site
- the type of work being done
- the mobile plant being used
- materials stored on the site.

The need for site security may change if the risk level increases (eg when trenching begins). To avoid securing the whole site, stage works so hazards are contained within smaller areas.

Temporary perimeter fencing (1.8 to two metres high) provides adequate security for most situations. Para-webbing firmly attached to star-pickets or posts may be suitable to secure low risk hazards (eg footpath work).

Site security needs to be fixed to prevent collapse and should be regularly inspected and maintained.

Rural fencing (1.2 metres high) limits access to the site but does not provide the same level of security as perimeter fencing. Danger tape or flags along posts or signs provide a visual warning only, so are not adequate as site security.

3.6 Investigating incidents, injuries and near misses

All incidents including injuries or near misses on-site should be reported, and recorded in the site's incident register. If a notifiable incident occurs, it must be reported to WorkSafe as soon as you're aware of the incident and the site must not be disturbed.

Each incident should be investigated and involve any worker, HSR or employer affected by the incident. The investigation should identify the underlying causes and determine what needs to be done to prevent a reoccurrence. A record should be kept of each investigation and any corrective actions.

3.7 Emergency response plan

The emergency response plan (ERP) should reflect the site location, ground conditions and the type of works to be undertaken. The ERP should be regularly reviewed and modified as site conditions change.

The ERP should anticipate emergencies such as:

- plant rollover and vehicle collisions
- contact with overhead powerlines or underground utilities assets
- excavation collapse or flooding
- treatment of injuries and evacuation of injured or ill workers.

Don't assume local emergency services have the capacity or equipment to provide site emergency medical or rescue services. Poor vehicle access (eg rough or muddy terrain) can delay or stop standard emergency vehicles.

It may be necessary to develop alternative arrangements in the ERP (eg a first aider trained in more advanced resuscitation techniques of defibrillators and giving oxygen or a standby 4x4 vehicle to get paramedics to the site).

4. High risk work involving plant and traffic

4.1 General

High risk construction work involves work on or near roads, railways or where there is movement of any powered mobile plant. An SWMS must be developed, maintained and followed for this type of work.

4.2 Plant operators

Powered mobile plant operators must follow the SWMS for the tasks they are undertaking and:

- be familiar with the operator's manual
- carry out the daily maintenance inspections
- record daily inspections, defects and repairs (eg in the service book)
- report defects without delay (if dangerous, stop work until repaired)
- not leave unattended operating or unsecured plant.

Operators must use all fitted safety features (eg seatbelts, grab rail and access steps).

4.3 Delivery and pick-up of plant

SWMS must be developed if loading or unloading powered mobile plant at the site. When developing these SWMS, consider the:

- type of plant to be delivered
- suitability of the transport vehicle, including:
  - traction of the deck material
  - dimensions and load rating of the deck and ramps
  - tie down and lashing points
  - loading or unloading methods
  - winching equipment on to and off tilt-trays (if relevant)
- competencies and experience required to operate the:
  - transport vehicle and any equipment used to load the plant
  - powered plant if it needs to be driven on/off the transporter
- environmental conditions of the site
- fall protection for the delivery worker.

Non-rebounding tensioners should be used with tie-down chains.

4.4 Driving plant on roads

If transporting powered mobile plant between workplaces, by driving it on a road accessed by the public, it must:

- be driven by an operator with the appropriate road licence
- be road registered
- be maintained in a roadworthy condition
- have an engineer's report for any structural alterations
- where required, have any necessary signage (eg wide load, warning lights and/or escort vehicles).

Set up the plant for road travel as per the operator's manual including:

- stowing or restraining any loose components (eg pipes, buckets, tools)
- inspecting the vehicle to confirm everything is secured.

Turnbuckle type non-rebound tensioners have no kickback when released

4.5 Operational safety zones

Where other workers could be at risk from the operation of powered plant including from trucks loading or discharging, establish a safety zone around the plant to restrict access to the area.

Safety zones should be clearly marked, have signed vehicle entry/exits with traffic controllers on duty (if required) and be adequately lit if working in the dark.

Only workers involved in the work should be in the safety zone. Procedures should be in place to restrict unauthorised persons access to the safety zone.

4.6 Vehicle drivers

To avoid collisions or other incidents, site drivers should comply with safety measures set out in the traffic management plan (TMP), SWMS and the worksite's safety rules. This includes:

- ensuring visual and audible warning devices work
- wearing seatbelts
- wearing PPE (eg high visibility/reflective safety vests)
- keeping to designated vehicle routes
- obeying speed limits and traffic directions, and keeping clear of other plant
- reporting safety concerns/problems to the supervisor.

Traffic controllers, if required, must be in a safe position and visible to drivers. The following should apply:

- drivers shouldn't enter the area until signalled by the traffic controller
- drivers should follow the traffic controller's directions
- truck drivers should stay inside the cabin unless directed otherwise
- if being directed into position, truck drivers must stop if they lose sight of the traffic controller.

Workers walking in/through the area should also follow the traffic controller's directions and take notice of warnings on vehicle movements.

4.7 Working near road traffic

An SWMS must be developed if working near road traffic. It should refer to the relevant TMP as one of the measures to control the risk from vehicle traffic.

Instruct workers on the SWMS and relevant TMP which may include:

- wearing high visibility clothing and other required PPE
- warning devices being used (eg beepers, buzzers and lights)
- traffic controllers
- signs and devices
- keeping clear of vehicle's travel path
- emergency procedures and escape routes.

Note: Star pickets can become projectiles if struck by vehicles and should not be used near road traffic, unless there is no other way of marking the border of the work zones. Pickets should be securely driven into the ground, have protective caps fitted and display warnings (eg caution lights, flags and signs).

The Code of practice, *Worksite safety – Traffic management* requires employers, unless exempted, to have a relevant road authority permit (eg consent to work) and a Memorandum of Authorisation (MOA) for any traffic management signage that requires authorisation.

These must be obtained before work on the road or within the road reserve begins. The MOA may be issued by VicRoads, local council or a public utility, depending on the location and type of work.

4.8 Protecting the public

Employers must protect pedestrians, cyclists and others from the risks associated with the work being done on or near public roads, including from moving trucks and powered mobile plant. VicRoads, or the local council, may specify the type of temporary pedestrian controls or diversions to be used.

When setting up pedestrian controls or diversions:

- create an alternative pedestrian path away from road traffic with clear signs and directions
- if diverting pedestrians onto the road cannot be avoided, use appropriate barriers and maintain personal clearance distances from traffic
- if directing pedestrians to cross a busy road, provide traffic control
- have traffic control at site access points
- place barricades or fences around the work area
- use hoardings to prevent splashing the public during wet weather
- ensure mud does not spread from the site onto footpaths/public roads
- ensure all controls are suitable for disabled people.

For longer duration projects, use pedestrian controls such as concrete barriers, flashing lights and temporary traffic lights.

4.9 Mobile plant warning devices

All vehicles operating within the works area should be fitted with at least one revolving amber light. If the light is not visible from all angles, additional lights should be fitted. A vehicle's standard hazard lights are considered inadequate.

Mobile plant and trucks should also have audible reversing warning devices fitted. If vehicles are often reversing near workers, consider fitting reversing cameras.

4.10 Personal electronic devices

Workers should not use personal electronic devices (eg mobile phones, phone earpieces or music players) when working near mobile plant, traffic or a site transit route. The risk of being struck increases if workers are distracted or cannot hear vehicles approaching, vehicle warning devices or verbal warnings.

Music or mobile phone headsets are not suitable as hearing protection and should not be worn under earmuffs or instead of earplugs.

4.11 Communication

Communication between supervisors, traffic controllers, plant operators, workers and drivers is essential and may include:

- **non-verbal -** signage and standard hand signals that cover the equipment's functions
- **verbal -** standard phrases, dedicated radio systems or mobile phones.

Workers' awareness of activity around them can be compromised when using radios or mobile phones for site communications. Site safety rules should include:

- stopping mobile plant while the device is in use
- pulling vehicles or mobile plant over and stopping in a safe location, unless a hands-free system is used
- ensuring workers on foot only to use these devices when in a safe location.

If workers are operating in remote locations or in isolation, effective communications should be in place.

4.12 Powerlines and electrical equipment

When operating mobile plant near powerlines the SWMS must detail how you will do the task safely, including how you will comply with the requirements of the 'no go zone' rules.

No part of a mobile plant or its load should come closer than 6.4 metres of pole-mounted powerlines or eight metres of a tower-mounted line, unless complying with 'no go zone' rules. Supervisors should monitor the site to ensure excavation works do not alter the ground levels and decrease safety clearances under powerlines.

For work near pole-mounted powerlines (*see Using earthmoving equipment near overhead electrical assets*). For work near transmission towers or within the tower easement, contact the asset owner.

When working near electrical equipment, allow adequate clearance around sub-stations, service pillars and lighting poles. Powerlines and electrical equipment is considered 'live' unless the asset owner confirms in writing electricity has been isolated.

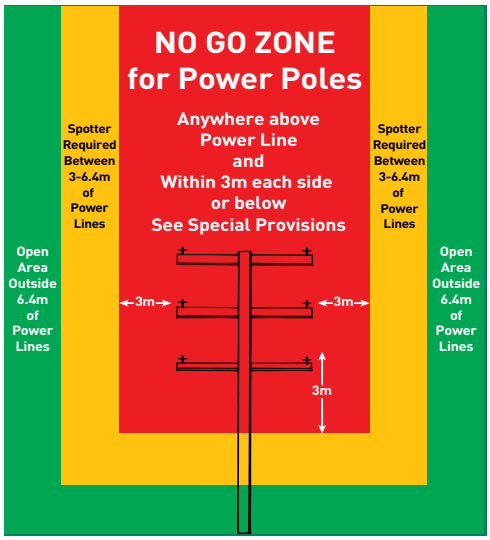

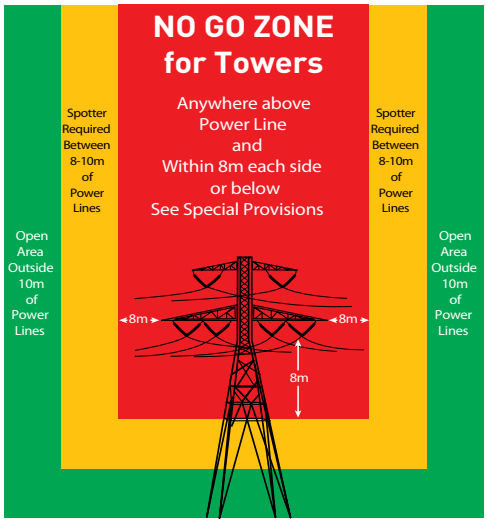

Clearance from overhead electrical cables

4.13 Contact with powerlines

If there is a risk that plant could make accidental contact with overhead powerlines, operators and other workers should be trained in emergency procedures necessary to protect them from electric shock.

If plant contacts powerlines, remove it from service until inspected by a competent person and verified as safe for use. For example, tyres can explode many hours after the incident from a pressure build-up caused by burning inside the tyre casing. Wheeled plant should be parked in an isolated area or have an exclusion zone around the plant for 24 hours. All tyres should then be removed from rims and inspected for internal damage before verifying the plant is safe to use.

Contact with powerlines is an incident that must be reported to WorkSafe. The asset owner and Energy Safe Victoria should also be informed.

4.14 Underground services

Identify underground services before doing mechanical excavating or ground penetration work. Dial Before You Dig (**1100.com.au**) is a free service that provides information on all known underground services. This includes registered pipelines, water and gas pipes, electrical and telecommunication cables, and other underground obstructions that the asset owner has registered with the service. An enquiry also alerts owners to work being done near their assets.

Where there is limited information available on underground services seek advice from the relevant asset owners or use another method (eg cable location device to identify the asset location). Hand dig or use non-destructive excavation to prove the asset location before starting mechanical excavation.

Never mechanically excavate closer to the asset than the distance specified in *Undertaking work near underground assets*.

4.15 Earthmoving equipment as a crane

Earthmoving equipment used to lift loads should have hose burst protection valves fitted on critical hydraulic cylinders (if the equipment has a rated capacity over one tonne).

Unless a designated lifting point is fitted elsewhere, only suspend loads from the manufacturer's designated lift points on the boom or the quickhitch. The rated capacity should be permanently displayed in a prominent position near the lifting point. Ensure the machine's load chart is mounted inside the cabin.

Ensure workers hold a high-risk work licence for dogging or rigging if required to:

- sling the load and exercise judgment on the load's mass or centre of gravity, or on the selection of slings or sling attachment points
- direct the operator if they are out of the operator's view, or the load is partly or fully out of the view of the operator.

Inspect lifting gear prior to use and maintain it (see 8.5).

4.16 Telehandlers

Telehandlers are available with different attachments such as forks, jib (crane) and a man-basket. Each configuration must comply with specific design requirements and the required operator competency varies with different configurations. Prior to use, verify that:

- the attachment is compatible with the particular telehandler
- all safe use documentation for the attachment is available
- the plant in the new configuration complies with relevant Australian Standards
- the operator has the correct high risk work licence and operator competency for that configuration.

5. Other high risk work

5.1 Preventing falls

The risks of workers falling from any height, including falls into excavations or from plant, should be addressed.

All tasks where the fall height is more than two metres must be identified and:

- implement the highest level control measures to reduce the risk of a fall for the task
- develop an SWMS before the task begins, then follow it
- establish emergency procedures for rescue and first aid, prior to a fall occurring.

Fall prevention controls need to be properly installed and maintained, until the work is no longer a risk.

5.2 Falls into excavations

Workers must be protected from the risk of falling into excavations. Fall protection measures should be determined after a risk assessment.

If the risk assessment identifies the need to isolate other site workers from an excavation, a barrier of para-webbing and star pickets can be used. It should be installed two metres from the edge of the excavation or at a distance equal to the excavation's depth. The barrier must be visible, stable, with the para-webbing securely fixed and the pickets fitted with protective caps.

At distances greater than two metres, two rows of safety tape or a single row of flags can replace the para-webbing. To protect the public, the excavation must be secured (see 4.8).

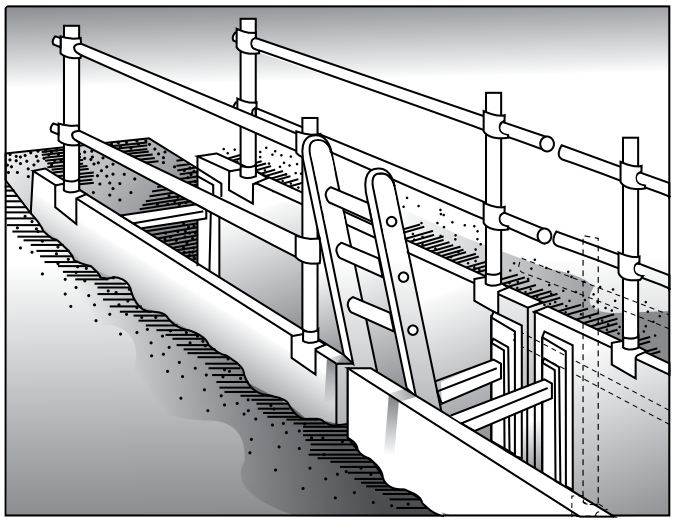

Trench shields with guard rails attached and safe access provided by a tied off ladder.

5.3 Preventing excavation collapse

If there is a risk of engulfment or if a collapse may affect the stability of neighbouring structures or utility assets, control measures must be in place such as:

- walls benched or battered back to a safe angle or ground support (avoid working near an unsupported wall when putting in the ground support)
- keeping materials, spoil and plant away from the edge
- regular inspection of the excavation by a competent person.

If trench shields are used, an SWMS must be developed for the installation, removal and use of the shields. Ensure the shields are:

- only used according to the manufacturer's specifications
- checked for damage before use
- only lifted from the designated lifting points
- not dragged unless designed to be dragged
- regularly inspected and maintained.

If workers are required to enter the excavation or shield, a safe method to enter and exit must be provided (eg a sufficiently long, secured ladder and landing platform).

Note: Trench shields are designed to protect workers from collapse and not to provide ground support.

5.4 Notification of excavation work

WorkSafe must be notified in writing at least three days before work starts on a shaft (two metres or deeper) or a trench (1.5 metres or deeper) or a tunnel, that a person can enter. If the excavation is part of building works and is covered by a building permit, only notify for tunnels.

5.5 Confined spaces

Trenches and pits can be confined spaces because of:

- the limited means of entry/exit
- the risk of engulfment
- poor ventilation
- the possible presence of toxic gases or vapours, or the accumulation of carbon monoxide if near road traffic.

A trench or pit can also turn into a confined space because of the work being done (eg fumes from welding or from plumbing glues).

If workers are likely to enter a trench or pit treat it as a confined space until the associated hazards have been assessed by a competent person. If a confined space, comply with confined space entry requirements in *Confined spaces - shafts, tunnels and trenches*

5.6 Use of explosives

If using explosives, verify the shot firer has an appropriate WorkSafe licence (class general) and has developed an SWMS.

The shot firer must develop a blast management plan (BMP) to protect workers and members of the public (eg from fly rock). The BMP may incorporate the SWMS and will specify the safe distance from the blast and the safety procedures for preparing and firing the charge.

5.7 Working in, over or adjacent to water

If workers are at risk of drowning, the work must not begin until an SWMS is developed. Control measures may include:

- not working alone, so an alarm can be raised and rescue initiated
- wearing PFD1 life jackets (self-inflating type are acceptable) unless:
  - buoyancy prevents operators escaping from submerged plant. In this case, use a manual inflation PFD1
  - an observer is on duty and a tethered life ring available (eg a life jacket has to be removed during hot work)
- ensuring enclosed cabins on mobile plant are fitted with emergency exits that can be opened from the inside and outside
- removing all vandal covers on plant before work starts
- developing an ERP and practising rescue procedures
- inducting workers onto the site, including SWMS and ERP
- instructing workers in the use, maintenance and storage of required PPE
- checking life jackets for damage before each shift
- testing life jacket inflation devices regularly
- ensuring on-site first aid arrangements are in place for treatment including ingestion of contaminated water.

Before supplying PPE and other equipment, such as footwear and tool belts, ensure they can be easily removed if the worker falls into water.

Note: Gum boots should not be worn.

6. Other hazards and risks

6.1 Controlling noise

Excessive noise can damage hearing and reduce the effectiveness of reversing beepers from mobile plant or vehicles, warning alarms and communication systems. It can also increase stress and fatigue. An indicator of excessive noise is when it's not possible to hear clearly during a conversation while standing one metre apart.

Noise may increase over the normal operating level if sound is reflected from structures or other plant is operating in the same area.

Workers must not be exposed to noise louder than 85dB(A) over eight exposure hours or 140dB(C) at any time. These limits are referred to as the exposure standard (see Appendix A).

When controlling noise, you must follow a hierarchy of control (see 2.6). Engineering controls are more effective at reducing noise than administrative or personal hearing protection (eg ear muffs).

If workers are required to wear PPE as protection from excessive noise, it must be worn when noise levels exceed the exposure standard. Employers must ensure these workers have hearing tests within three months of starting work and at least every two years.

Music or mobile phone-type headsets are not suitable hearing protection and should not be worn under earmuffs or instead of earplugs.

6.2 Contaminated soil and ground water

Works may uncover abandoned or buried materials and substances that can be a risk to health, including:

- asbestos and other fibrous material
- fuels and lubricants (eg leaking underground tanks or buried drums)
- contaminated ground water
- inorganic compounds (eg cyanide)
- materials from landfill
- medical and radioactive waste
- metals (eg lead)
- unexploded munitions.

Naturally occurring substances can also be a risk to health, such as coastal acid sulphate soils. These soils are generally found in low lying areas on coastal plains and along the edges of water bodies where sulphate-rich water mixes with iron and organic matter. Contact can result in skin irritations or burns and corrosion to plant.

Procedures should be in place to stop the work, identify the contaminant, determine if there is a risk and implement measures to control exposure (eg bulk removal of contaminated soil).

6.3 Dust

If work generates dust, it can affect the health of workers and the public. It may also reduce visibility, increase machinery wear and pollute waterways. Measures should be implemented to prevent dust being created (eg retain vegetation coverage) rather than relying on dust suppression measures (eg spraying water).

If spraying recycled water, use water treated to 'class A' standard. Water of lower standard requires special precautions before and during use to protect health. All recycled water containers should clearly display 'non-potable water' decals.

6.4 Servicing and cleaning plant

There must be safe work practices for servicing and cleaning plant. These work practices should be based on the manufacturer's procedures and the:

- type of work
- chemicals or substances used
- prevention of manual handling injuries
- prevention of slips, trips and low height falls.

For some servicing and cleaning tasks, an SWMS must be developed and followed, including where:

- a worker is at risk of falling two metres or more
- the location is adjacent to a public road or railway
- other mobile plant is operating in the vicinity.

An SWMS may also be required for servicing/cleaning if the plant was exposed to contaminated soil or chemicals.

6.5 Hazardous substances

A register of hazardous substances must be prepared and maintained in relation to all hazardous substances supplied to the site (and include all hazardous substances brought on-site by contractors). Current material safety data sheet (MSDS) for each hazardous substance must be available. The register and MSDS must be kept on-site.

Ensure all hazardous substances are used and stored safely. This includes:

- correct labelling and if required, correct placarding
- use of suitable storage containers
- ventilation if required
- suitable firefighting equipment available
- procedures and equipment for cleaning up spills.

6.6 Gas cylinders

Gas cylinders should be stored outdoors or in a well-ventilated area, even when empty. While protection from weather is desirable, it should not be at the expense of ventilation.

Oxygen cylinders should be stored at least three metres from fuel gas cylinders, unless separated by a firewall. All cylinders should be stored and secured in an upright position and if filled with flammable gas, at least five metres from any source of ignition.

7. Safe plant

7.1 Documentation

All powered plant (new, used, hired, imported or locally manufactured) must have safety documentation available. This documentation should be kept for the life of the plant and provided to the purchaser when the plant is sold.

Plant safety documentation must be legible and in English. It should also include:

- all information supplied by the manufacturer at the time of purchase
- operator's instructions or manuals
- manufacturer's safe use information and conditions of use
- manufacturer's inspection and maintenance requirements
- if used plant, up-to-date service books and maintenance records
- current risk assessments on the plant's hazards
- if modified plant (eg a tipper tray on a cab-chassis), instructions and safe information from the modifier about the modification and the results of a risk assessment about the modification's effect on the overall plant.

7.2 Plant identification

Powered plant should have the following information clearly and permanently marked on accessible data plates:

- name of manufacturer, distributor or certifying person
- make and model numbers and the plant's serial number
- for mobile plant, the date of manufacture or date the plate was issued
- specifications for roll over protection structures (ROPS) and falling object protection structures (FOPS), if fitted.

Some powered plant may also require:

- WorkSafe plant registration (eg mobile crane)
- VicRoads vehicle registration and insurance, if driven on the road
- VicRoads or interstate driver's logbook and over length and over weight permits.

7.3 Manuals and service books

Powered mobile plant must have a copy of the operator's manual. If the manual is unavailable, instructions developed by a competent person that cover:

- transportation
- set-up and safe operation
- emergency procedures
- minor maintenance and repairs.

Powered plant should be operated according to the operator's manual. Operators should have access to the latest manuals and other relevant safety information.

The plant should have an up-to-date summary of the plant's inspection and maintenance records. It should also have a method for the operator to record the daily checks and on-site maintenance. For powered mobile plant it could be a service book containing:

- information that identifies the machine
- daily operator checks required
- periodic maintenance required
- defects found and repairs made
- summary of maintenance records.

Operators must be trained and competent in:

- operating the plant according to the operator's manual or instructions
- carrying out the daily operational inspections/checks
- maintaining the service book or operator inspection records.

7.4 Warning and safety signs

Ensure all appropriate warning and safety signs/stickers/decals are legible, in good condition and correctly positioned on equipment.

7.5 Controls

Operator controls should:

- be clearly marked with symbols or words in English to show function
- move in the direction of motion being controlled
- return to the neutral position when released
- only be operable from one position at a time
- be fitted with emergency stop buttons, if required.

7.6 Purchasing plant

When purchasing plant, consult with workers who will operate or maintain the plant. Also consider any risks from the plant, including:

- operator ergonomics, such as:
  - adjustability of seating and controls
  - vibration damping (eg suspension seat)
  - cabin noise damping
  - cabin comfort (eg heating and cooling)
  - cabin and work lighting to minimising glare and reflections
- safe entry and exit from the cabin, including emergency exit
- falls from the machine
- cleaning, servicing and maintenance.

Note: Ensure new plant has all the required safety features fitted at purchase.

7.7 Selling or disposing of used plant

When selling or disposing of used plant, the owner has legal duties as a supplier of plant even if the plant is sold through an agent. The seller must ensure plant is safe for use and has adequate safe use information.

The plant must be sold as one of the following:

- **Category 1 –** Safe for use and without defects and has all safe use documentation. The purchaser should be informed in writing, 'the plant is safe to use for its intended purpose'.
- **Category 2 –** Safe for use and without defects but without all safe use documentation. The purchaser should be informed in writing, 'the plant **must not be used** until the purchaser has replaced the missing documentation'.
- **Category 3 –** Unsafe, with defects and may/may not be missing safe use documentation. The purchaser should be informed in writing, 'the plant in its present condition is sold for spare parts or scrap and **must not be used**'. This does not prevent the purchaser from repairing the plant and putting it back into service.

The seller must provide the buyer with any information in their possession about the safe use of the plant and any inspection, maintenance and repair records. This should include any known defects and missing documentation.

7.8 Purchasing used plant

If intending to purchase category two or three plant, in addition to the requirements above, consider the plant's condition and additional costs required to put it back into service, such as:

- obtaining missing safety documents
- repairs
- alterations to fit hazard controls (eg seatbelts, ROPS and FOPS)
- engineer certification for any after market modifications or accessories
- a major inspection
- developing a maintenance program.

Before buying the plant it should be inspected by a competent person to determine the plant's condition and the work required to make it safe for use. If a record of maintenance and inspection is not available, the plant should be subjected to a major inspection (see 8.3).

Do not use the plant until all required safety documents are obtained and, for category three plant it is also returned to a safe condition.

If purchasing used registered plant, the purchaser must notify WorkSafe within 21 days of the change of ownership.

7.9 Quickhitches

Quickhitches should comply with AS 4772: *Earth-moving machinery - Quickhitches for excavators and backhoe loaders*, including having a secondary safety system that:

- locks in an engaged position
- only disconnects by intentionally disengaging
- is only used to support attachments designed for the quickhitch.

Quickhitches must be maintained in safe working order and be marked with the model, serial number, manufacturer's name, quickhitch weight, maximum rated capacity and the capacity of each lifting point.

7.10 Trench shields

Trench shields should be fitted with designated lifting points and have the total weight permanently and legibly marked on the shield. If not, the shield can only be rigged for lifting by a dogman or rigger.

Trench shields should be designed and built to comply with:

- Code of practice, *Safety precautions in trenching operations*, or
- AS 4744: *Steel shoring and trench lining equipment* (if built after 2000) and be supplied with the manufacturer's instruction manual.

8. Inspection, maintenance and repair of plant

8.1 General

Regular inspections and preventative maintenance are essential for safe and efficient operation of powered mobile plant.

A maintenance and inspection program should take account of the plant's working environment and usage. It should be based on the manufacturer's recommendations or designed by a competent person to either achieve the same safety outcomes or compliance with the relevant Australian Standard.

Where plant is mounted on a carrier vehicle (eg tipper on a truck), the maintenance program needs to include the vehicle and plant manufacturers' requirements.

The maintenance program should include:

- daily pre-start checks and tests
- regular reviews of plant risk assessments
- routine inspection, servicing and maintenance at specified intervals
- major inspections at specified intervals.

The following should be recorded in the plant's service book and in more detail in the maintenance records:

- inspections and maintenance
- defects found and repairs undertaken
- structural alterations.

The plant's service book and maintenance records should be kept for the life of the plant and provided to the purchaser when the plant is sold.

8.2 Regular maintenance

All powered plant should be inspected and maintained by a competent person at intervals specified in the maintenance program.

The inspection should also check the plant's service book to:

- verify inspections and maintenance have been done
- review the list of recorded defects
- ensure necessary repairs have been carried out.

Where there are no records of maintenance, inspection, repairs or modifications, a major inspection should be done by a competent person to determine the plant's current condition.

Routine maintenance should include servicing, checks on operator controls and aids, and for metal fatigue in critical wear or stress points.

Note: Routine maintenance may be done in-house, provided workers are competent to undertake the work.

8.3 Major inspection

A major inspection verifies powered mobile plant is in sound mechanical condition. Ensure the major inspection is done or overseen by a competent person with the necessary qualifications or experience. It should include checks of equipment and plant attachments not normally undertaken during regular maintenance.

This inspection should include:

- verification that the maintenance program is being followed
- review of current plant risk assessment for relevance and adequacy of risk controls
- visual checks and inspections to assess the overall condition of the plant to:
  - identify defects
  - determine any repairs required
  - verify safety devices are working
  - verify operator controls and aids are working
- recommendations for changes to the existing maintenance program
- verification that all defects have been rectified to standard.

The inspection report should include:

- name and contact details of the competent person
- qualification or experience to oversee the inspection
- identification of the plant
- statement that the plant is safe for continued use
- date for the next major inspection.

A major inspection should be done annually and may occur during regular maintenance.

8.4 Repairs and modifications

Any repairs made to plant should be according to the manufacturer's maintenance and repair manuals or detailed instructions from a competent person. The National Transport Commission has requirements for the modification of a road carrier vehicle.

All repairs and any replacement of components should:

- be carried out by a competent person
- use original equipment manufacturer (OEM) parts or those that are compatible with OEM and with at least the same specifications
- be recorded in the service book
- be detailed in the maintenance records.

Note: The modifier of the plant may take on legal obligations of designer, manufacturer and supplier when they alter plant. Duties include doing a risk assessment and providing safe use information.

Welding of load bearing components, should be done by a suitably qualified welder and follow AS/NZS 1554: *Structural steel welding*. It should be recorded in the service book and detailed in the maintenance records.

Work or inspections should never be done under a raised component (including trays, buckets and booms) unless the component is securely propped to protect the person from the failure of the lifting mechanism.

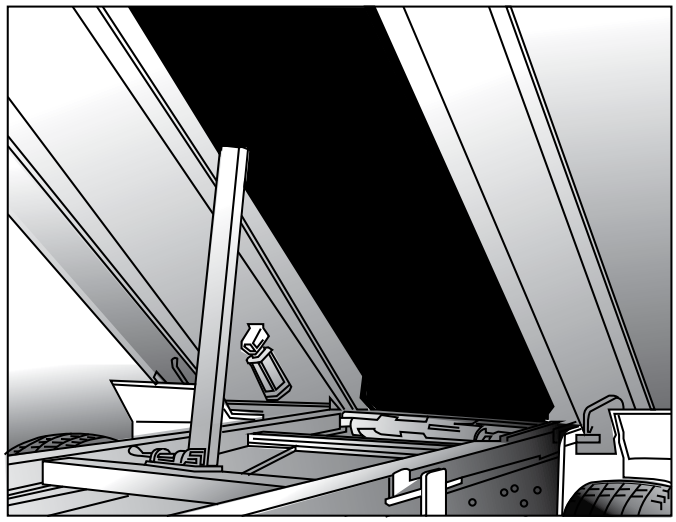

Vehicle-mounted props or purpose-designed temporary propping stands that are secured to prevent movement or dislodgement.

Image reproduced courtesy of SafeWork SA

8.5 Lifting equipment

Chains and slings should be inspected and tagged annually by a competent person, such as a person from an inspection service of a specialist chain and sling supplier or a person trained to carry out the inspection.

8.6 Other equipment

Regularly inspect electrical tools, hand tools and non-mobile powered plant to verify the equipment remains in a safe condition. Electrical equipment must be inspected, tested and tagged.

For larger pieces of powered plant (eg rock crushers, motor vehicles, compressors) inspection and maintenance programs should be developed.

Hand tools and other non-powered equipment (eg ladders, scaffolds) should be visually checked for defects and operation before being sent to site. Faulty equipment should be removed from service for disposal or repair.

Further information

WorkSafe publications

WorkSafe position, *How WorkSafe applies the law in relation to reasonably practicable*

Compliance code, *Prevention of falls in general construction*

Code of practice, *Storage and handling of dangerous goods*

Code of practice, *Hazardous substances*

Code of practice, *Plant*

Industry standard, *Contaminated construction sites*

Controlling OHS hazards and risks

Working safely in the general construction industry

Guide to incident notification

Assessing and fixing noise problems at work

Sun protection for construction and other outdoor workers

Safe handling when securing loads on trucks

Telehandlers - design and licensing

Asbestos contaminated soil

Portable oxy-acetylene equipment

SellSafe - Information package for suppliers

Preventing falls from earthmoving equipment

Civil Contractors Federation

Environmental guidelines for civil construction
Guideline environmental management - Doing it right on sub-division sites
How to prevent falls when using mobile plant

Country Fire Authority

Fire hazard ratings

Department of Sustainability and Environment

Coastal acid sulphate soil strategy
Best practice guide for assessing and managing coastal acid soils

Environment Protection Authority

Acidic sulphate soil and rock
Environmental management - Doing it right on sub-division sites

National Transport Commission

Heavy vehicle modifications

Definition of terms

AS: Australian Standard

Asset owner: Owner of infrastructure assets or provider of a utility service

AS/NZS: Australia/New Zealand (joint standard)

CCF: Civil Contractors Federation

Competent person: A person who by their training or experience has the skills and knowledge to carry out the task they are to undertake.

Contractor: Company or self-employed person who undertakes works under a contract

Emergency services: Fire brigade, state emergency service, ambulance etc

MOA: Memorandum of Authority for traffic management signage

Principal contractor: The owner of the project is considered to be the PC unless they appoint another person to manage and control the workplace, which means that person becomes the PC. This appointment should be in writing.

Reasonably practicable: In determining what is reasonably practicable in relation to ensuring health and safety, regard must be had to the following matters:

a) the likelihood of the hazard or risk occurring

b) the degree of harm that would result if the hazard or risk occurred

c) what the person concerned knows, or ought reasonably to know, about the hazard or risk and ways of eliminating or reducing the hazard or risk

d) the availability and suitability of ways to eliminate or reduce the hazard or risk

e) the cost of eliminating or reducing the hazard or risk.

Sub-contractor: A contractor or self-employed person contracted by another contractor to undertake specific work

SWMS: A safe work method statement outlines a process for identifying and controlling OHS risks. An SWMS must be prepared before undertaking high risk construction work if anyone's OHS is at risk because of the work.

Urban area: Area of subdivided residential allotments (0.4 hectare maximum) with constructed streets, fire fighting services and three street lights every 500m.

Workers: All direct employees and any contractors and the contractors' employees.

Appendices

Appendix A – Noise ready reckoner

The tables below provide a simple way to work out total noise exposure during an eight hour shift, if you know the noise level and duration of each 'noisy' task. The 85dB(A) equivalent eight-hour exposure standard is equal to 100 'noise exposure points'.

From the left table read off the 'noise exposure points' that corresponds to each task's noise level and the duration of the task, and then add them together to obtain the total exposure points for the worker.

The right table converts the total exposure points to a total exposure rating in dB(A) for the eight-hour shift. For shifts between 10 and 14 hours add 1dB(A) to the total exposure rating to compensate for the reduced recovery time between shifts. An example of total noise exposure with three noisy tasks might be:

100(1hr x 94dB(A)) + 200(5hr x 90dB(A)) + 20(2hr x 84dB(A)) = 320 or 90dB(A)

The background colour of the table cell, corresponding to the sound level and exposure time, shows if the worker is:

a) above the 85dB(A) standard - **Red**

b) below - **Green**

c) marginal - between 80 to 85dB(A) – **Yellow**

Sound Level LAeq,T dB(A)	Table C1 Duration of exposure per shift							
	15 min	30 min	1 h	2 h	4 h	8 h	10 h*	12 h*
105	320	640	1270	2530	5060	10120	12650	15180
104	250	500	1000	2010	4020	8040	10050	12060
103	200	400	800	1600	3200	6400	8000	9600
102	160	320	640	1270	2540	5070	6340	7600
101	130	250	500	1010	2010	4030	5040	6040
100	100	200	400	800	1600	3200	4000	4800
99	80	160	320	640	1270	2540	3180	3810
98	63	130	250	500	1010	2020	2520	3030
97	50	100	200	400	800	1600	2000	2410
96	40	80	160	320	640	1270	1590	1910
95	32	63	130	250	510	1010	1260	1520
94	25	50	100	200	400	800	1000	1210
93	20	40	80	160	320	640	800	960
92	16	32	63	130	250	510	630	760
91	13	25	50	100	200	400	500	600
90	10	20	40	80	160	320	400	480
89	7.9	16	32	64	130	250	320	380
88	6.3	13	25	50	100	200	250	300
87	5.0	10	20	40	80	160	200	240
86	4.0	8.0	16	32	64	130	160	190
85	3.2	6.3	13	25	50	100	130	150
84	2.5	5.0	10	20	40	80	100	120
83	2.0	4.0	8.0	16	32	64	80	96
82	1.6	3.2	6.3	13	25	51	63	76
81	1.3	2.5	5.0	10	20	40	50	60
80	1.0	2.0	4.0	8.0	16	32	40	48
79	0.8	1.6	3.2	6.4	13	25	32	38
78	0.6	1.3	2.5	5.0	10	20	25	30
77	0.5	1.0	2.0	4.0	8.0	16	20	24
76	0.4	0.8	1.6	3.2	6.4	13	16	19
75	0.3	0.6	1.3	2.5	5.1	10	13	15

Table C3: Conversion	
Total exposure points	LAeq,8h dB(A)
32000	110
25420	109
20190	108
16040	107
12740	106
10120	105
8040	104
6400	103
5070	102
4030	101
3200	100
2540	99
2020	98
1600	97
1270	96
1010	95
800	94
640	93
510	92
400	91
320	90
250	89
200	88
160	87
130	86
100	85
80	84
64	83
51	82
40	81
32	80
25	79
20	78
16	77
13	76
10	75

Information and table reproduced courtesy of Safe Work Australia, Code of practice, Managing noise and preventing hearing loss at work

Appendix B – Mobile plant blind spots

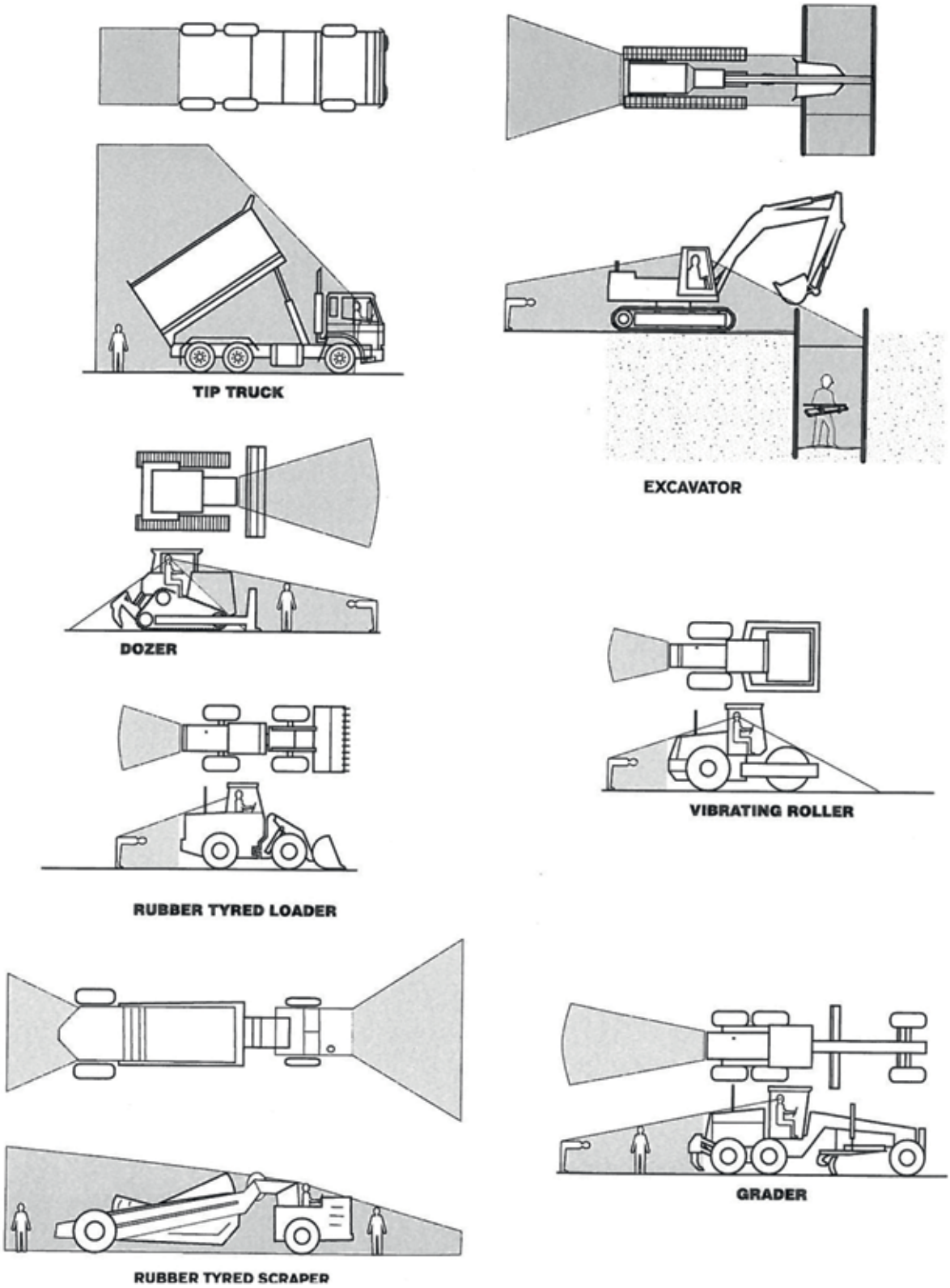

Blind spots where operators may not see ground workers

*Graphics reproduced courtesy of WorkSafe, Department of Commerce, Western Australia (**worksafe.wa.gov.au**)*

Appendix C – Checking lifting gear

	Reject	Good
Working load limit (WLL) must be marked on hooks, the safety catch functions correctly and there is no sign of cracks or damage		
Shackle safety pins are suitably rated for the shackle and correctly fitted		
Synthetic slings must be in good condition and labelled with their working load limit (WLL) and other appropriate information		
Chain links must not be worn or stretched in excess of 10%	 Greater than 10% wear. Stretched	
Flexible steel wire rope must not be used if more than 10% of wires are broken in any length of its lay		
All slings must be labelled or tagged with their working load limit (WLL) and other appropriate information. Labels and tags must be legible and in English	 	 

Developing industry standards in partnership

Foundations for Safety Victoria is Victoria's primary forum for dealing with OHS issues in the construction industry. It brings together regulators, employer associations and construction unions.

Chaired by WorkSafe Victoria, Foundations for Safety Victoria meets every three months. One of its initiatives is to establish working parties to progress various OHS initiatives such as developing industry standards.

Organisations represented on Foundations for Safety Victoria are:

Air Conditioning and Mechanical Contractors Association

Australian Industry Group

Australian Manufacturing Workers Union

Australian Workers Union

Building Commission Victoria

CEPU Electrical Trades Union

CEPU Plumbing Division

CFMEU Construction and General Division

Civil Contractors Federation

Energy Safe Victoria

Finishing Trades Association of Australia

Housing Industry Association

Master Builders Association of Victoria

Master Plumbers and Mechanical Services Association of Australia

National Electrical and Communications Association

National Federation of Bricklayers and Masonry Employers

Plumbing Industry Commission

Royal Australian Institute of Architects

Victorian Construction Safety Alliance

Victorian Crane Association

Victorian Employers Chamber of Commerce and Industry

Victorian Trades Hall Council

WorkSafe Victoria

You can help improve OHS in the construction industry by providing feedback on this industry standard or on other OHS issues to any member organisation of Foundations for Safety Victoria.

Acknowledgements

This industry standard has been published by WorkSafe Victoria on behalf of Foundations for Safety Victoria. It was developed with the assistance of a working group of contractors, industry associations, unions and WorkSafe.

The working group consisted of representatives from:

- Australian Workers Union
- CFMEU (Construction and General Division)
- Civil construction employers
- Civil Contractors Federation
- Municipal Works Officers Association
- Victorian Electricity Supply Industry
- VicRoads
- Victorian Construction Safety Alliance
- VicWater
- WorkSafe Victoria.

Disclaimer

The information presented in the Industry standard, *Civil construction – A guide to managing safety* is intended for general use only. It should not be viewed as a definitive guide to the law and should be read in conjunction with the *Occupational Health and Safety Act 2004*.

Whilst every effort has been made to ensure the accuracy and completeness of the industry standard, the advice contained herein may not apply in every circumstance. Accordingly, the Victorian WorkCover Authority cannot be held responsible, and extends no warranties as to the suitability of the information for your specific circumstances; or actions taken by third parties as a result of information contained in the Industry standard, *Civil construction – A guide to managing safety* was developed.

Copyright

The information contained in this publication is protected by copyright. The Victorian WorkCover Authority grants a non-exclusive licence in this publication to the recipient on the condition that it is not disseminated for profit. The Victorian WorkCover Authority encourages the free transfer, copying and printing of the information in this publication if such activities support the purposes and intent for which the publication was developed.

WorkSafe Victoria is a trading name of the Victorian WorkCover Authority.

WorkSafe Victoria

WorkSafe Agents

Agent contact details are all available at **worksafe.vic.gov.au/agents**

Advisory Service

Phone (03) 9641 1444
Toll-free 1800 136 089
Email info@worksafe.vic.gov.au

Head Office

222 Exhibition Street, Melbourne 3000

Phone (03) 9641 1555
Toll-free 1800 136 089
Website **worksafe.vic.gov.au**

For information about WorkSafe in your own language, call our Talking your Language service

廣東話	1300 559 141
Ελληνικά	1300 650 535
Македонски	1300 661 494
Italiano	1300 660 210
普通话	1300 662 373
Српски	1300 722 595
Español	1300 724 101
Türkçe	1300 725 445
Việt Ngữ	1300 781 868
العربية	1300 554 987
English	1300 782 442
Other	1300 782 343

WSV1475/01/02.12